Round 1 - Thursday, September 16, 2021

SHOTLINK

Fortinet Championship

Silverado Resort & Spa (North)

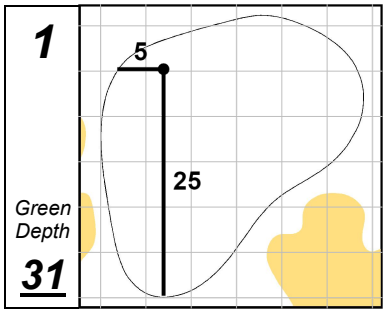

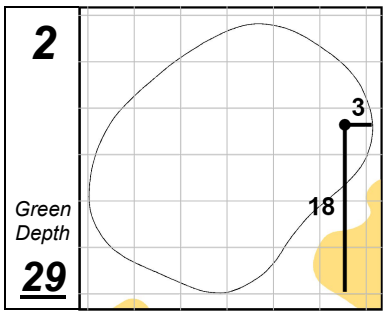

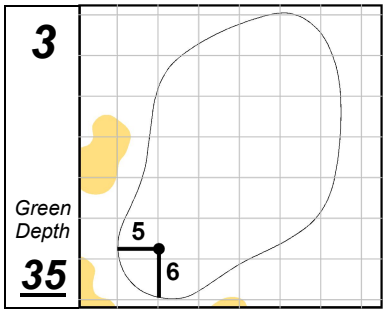

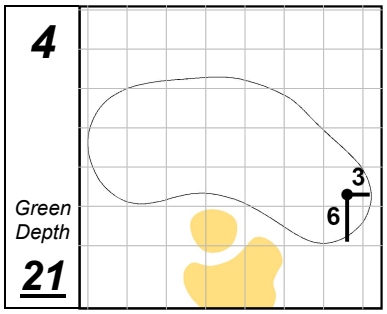

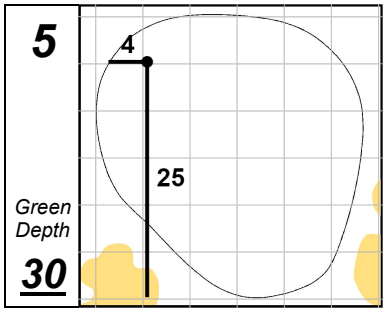

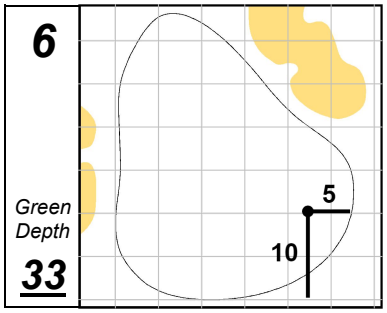

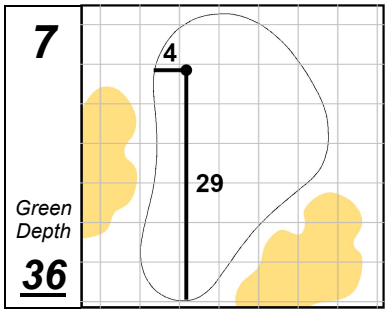

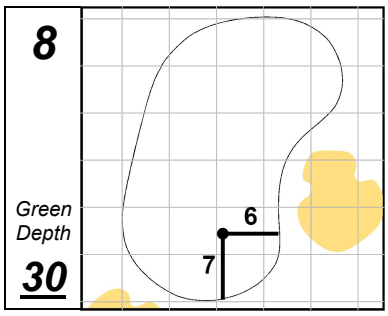

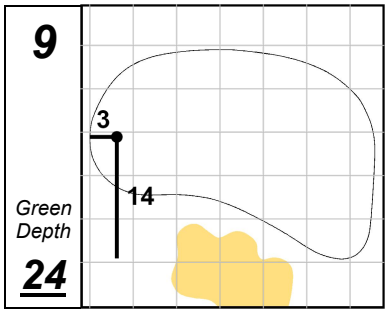

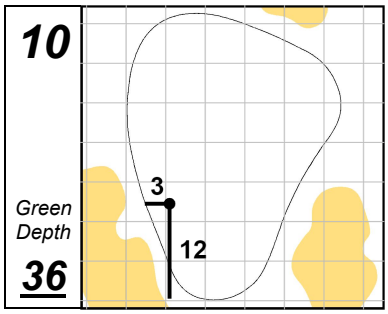

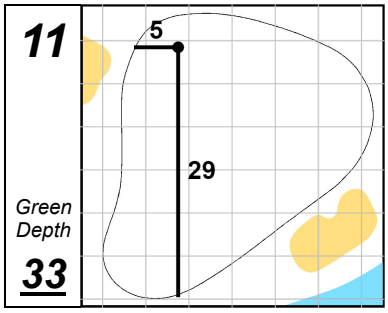

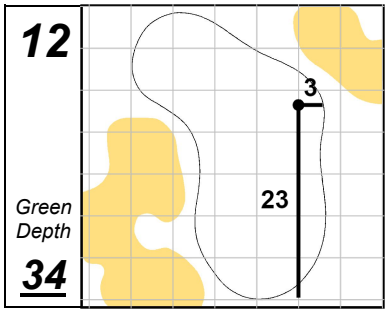

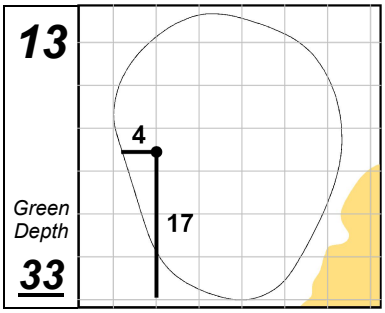

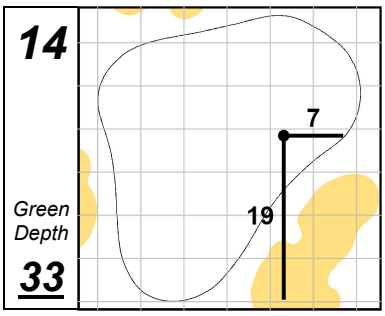

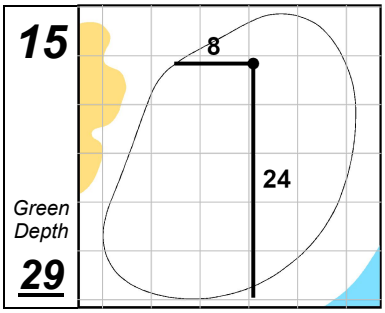

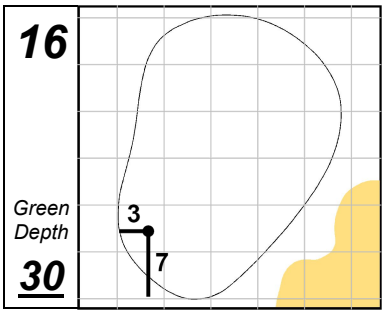

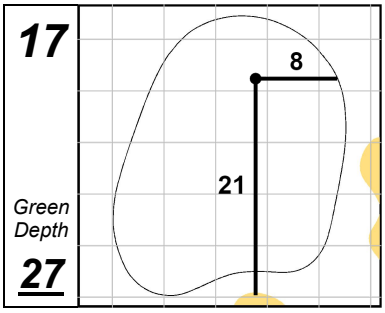

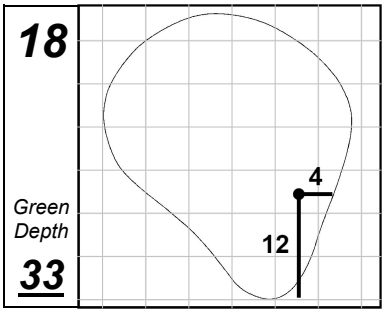

Each side of a complete square on the green represents 5 YARDS.

Wednesday, September 15, 2021 12:07:01 PM